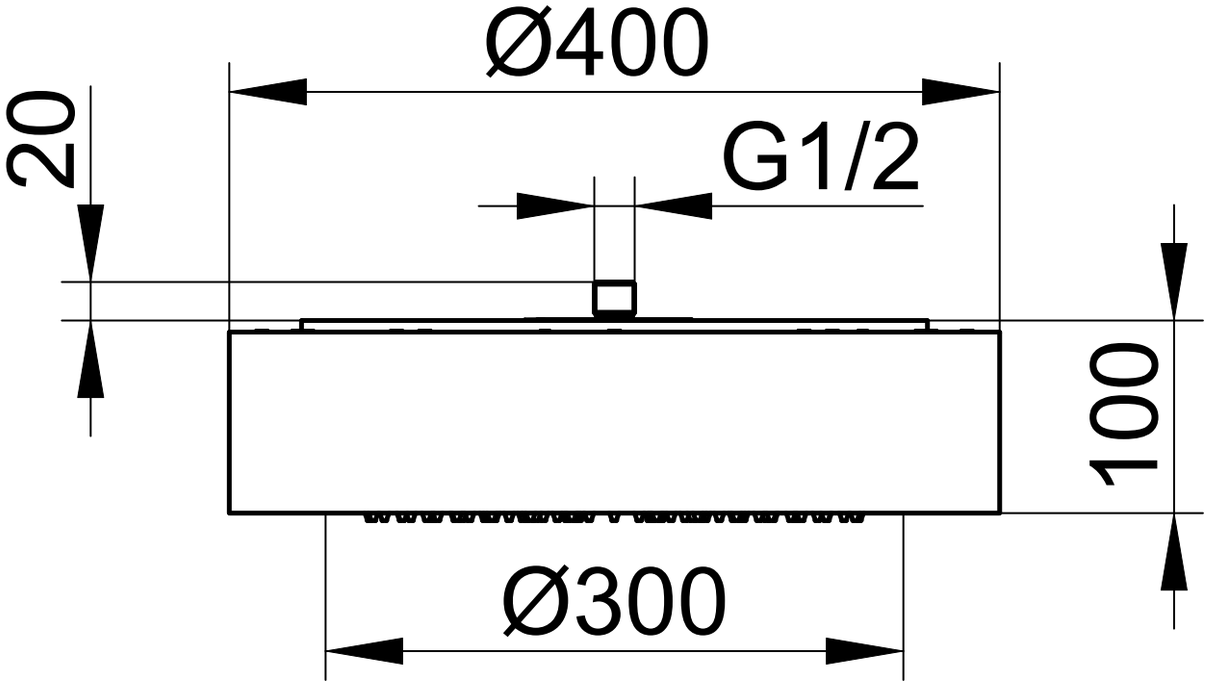
Ø400
20
G1/2
100
Ø300

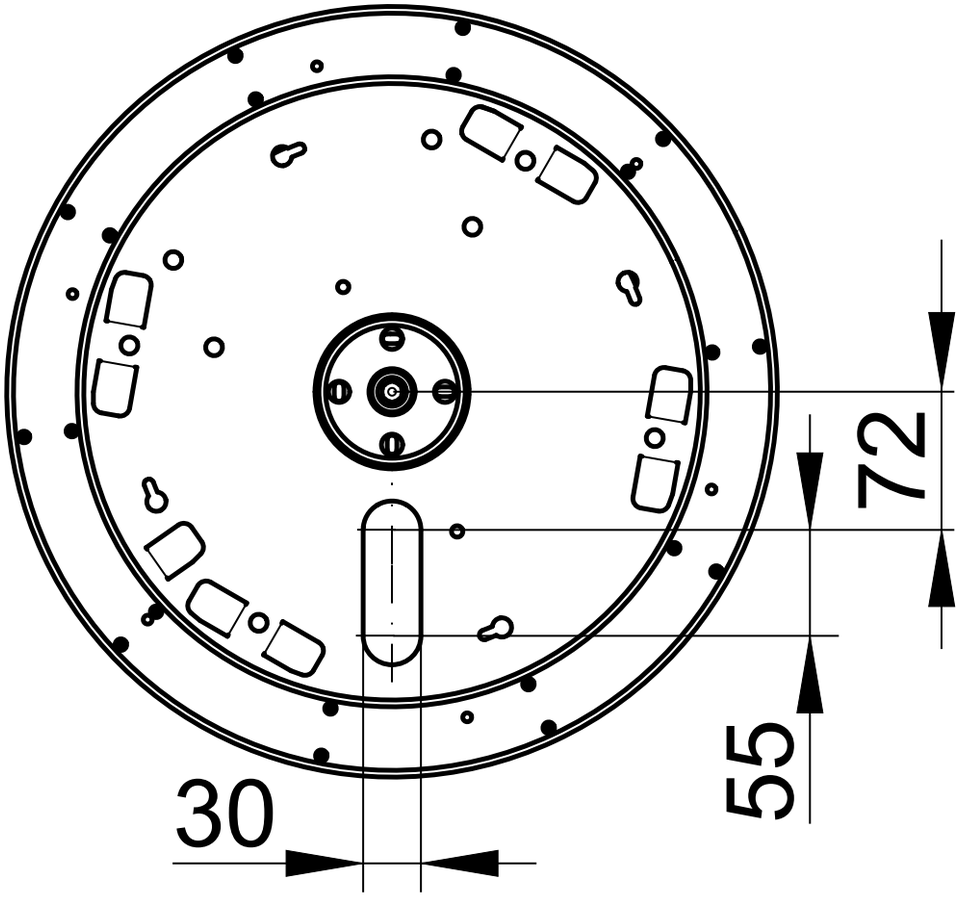
72
55
30